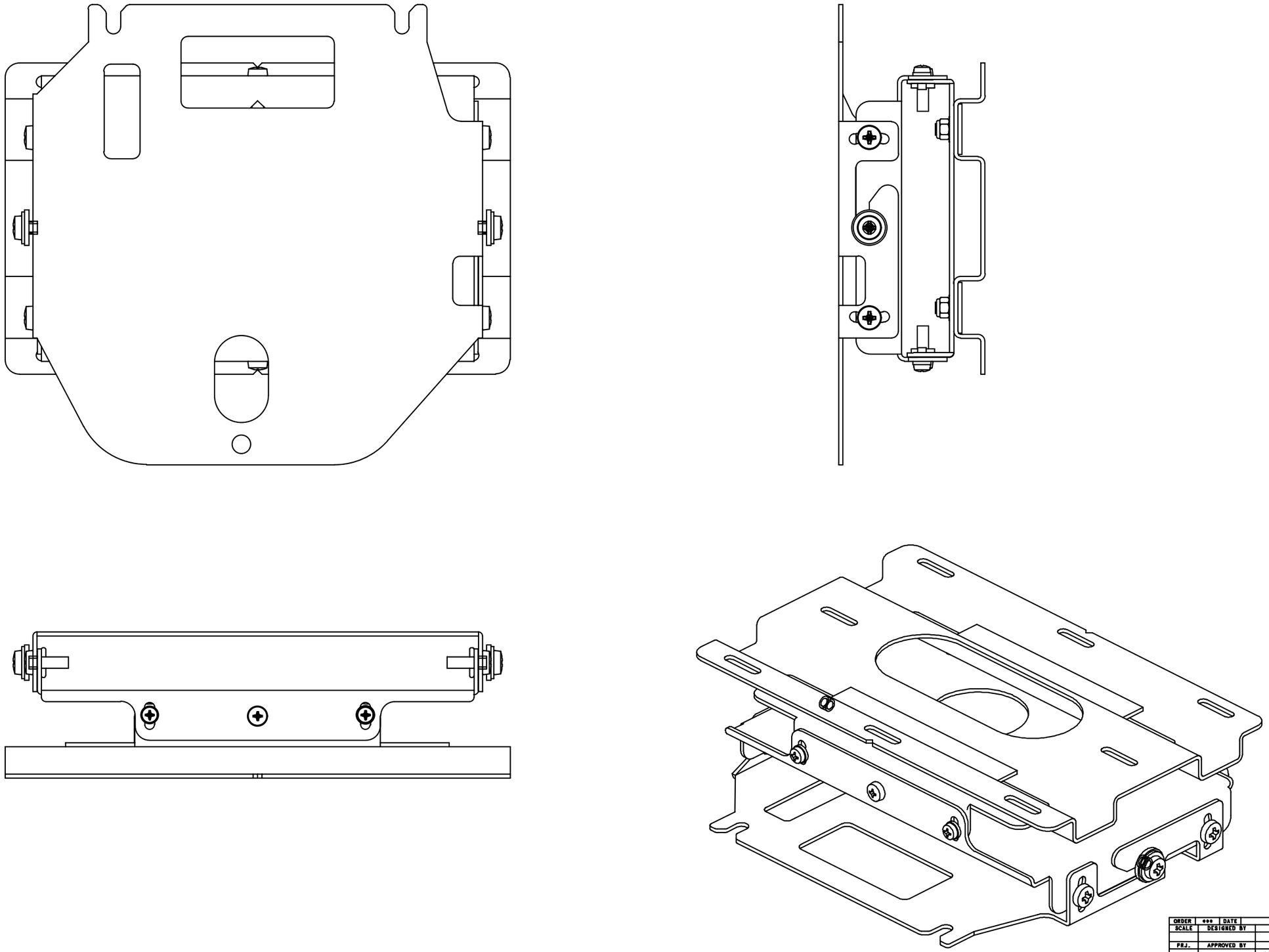

ORDER	•••	DATE		TOOL1		TOOL2	
SCALE	DESIGNED BY		MATERIAL		TREATMENT		REVISION
			•••				
PRJ.	APPROVED BY		PART NAME		PART CODE		PAGE
			MOUNT20		•••		

MARANTZ JAPAN INC