SR6005

RS-232C Control

Specification

Category	:	***AV Receiver***
Document Version	:	***1.00***
Author(s)	:	***Marantz America, LLC.***
Date	:	**Sep/27/2010**
Number of Page	:	**9**

Marantz America, LLC. 2010
All rights are reserved. Reproduction in whole or in part is prohibited without the written consent of copyright.
All specifications might be subject to change without notice.

Table of Contents

1. Introduction 3
1-1. Purpose 3
1-2. Scope 3
1-3. Abbreviations 3
1-4. References 3
Global Description 4
1-5. Overview 4
1-6. Block Diagram for RS-232C connection 4
1-7. RS-232C pin assignment 4
1-8. Assumptions and Dependencies 4
2. Detailed Description 5
2-1. Connection format 5
2-1-1. Physical connection 5
2-1-1-1. Data transmission sequence from Host to Slave 5
2-1-1-2. Data transmission sequence from Slave to Host 5
3. Definitions of Command, Status and Layer 6
3-1. Commands 6
3-1-1. Normal Command list 6
3-2. Status request and Status answer list 6
3-2-1. Normal Status request and Status (answer and feedback) list 6
4. Revision history 6

1. Introduction

1-1. Purpose

This document was written as a reference specification of products that are controled by the host controller.

1-2. Scope

This document would be using by software or hardware engineers for production of the product.

1-3. Abbreviations

Abbreviation	Description

1-4. References

- Host I/F Command DefinitionHost Controller Interface Specification ver. 0.3

Global Description

1-5. Overview

A Host controller can control or watch out the product as a Slave very easily via the communication cable.

1-6. Block Diagram for RS-232C connection

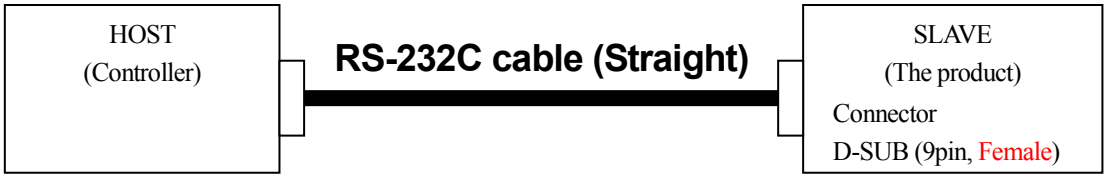

*** The product connector is using D-SUB 9pin female.**

1-7. RS-232C pin assignment

uP Interface	Signal name	Connection device	D-Sub Pin	Connecter
-	GND	-	1	<The product connector> RS-232C D-SUB (9pin,**Female**) 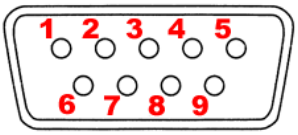
UART	**TxD (output)**	**RS-232C Level shift driver**	**2**	
	RxD (input)		**3**	
-	N.C.	-	4	
-	**GND**	**Common GND**	**5**	
-	N.C.	-	6	
-	N.C.	-	7	
-	N.C.	-	8	
-	N.C.	-	9	

1-8. Assumptions and Dependencies

2. Detailed Description

The interface specification between the product and a Host controller is described below.

2-1. Connection format

2-1-1. Physical connection

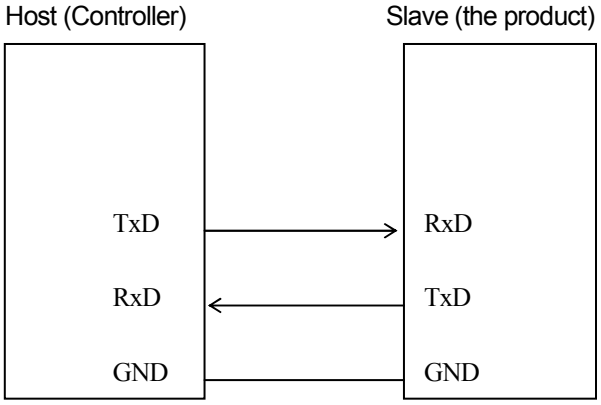

(Serial setting <RS-232C basic>)
Baud Rate : 9600bps
Data Bits : 8bit
Parity : None
Start&Stop bit : 1bit
Communication procedure
: Non procedural
Comunication data length
: 135 bytes (maximum)

2-1-1-1. Data transmission sequence from Host to Slave

Host (Controller) Slave (The product)

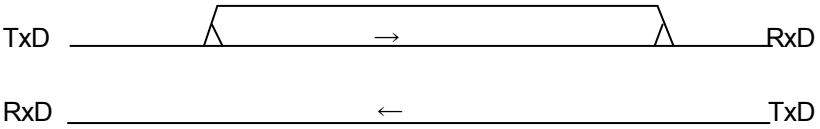

1. Host starts a data transmission from TxD.
2. Host performs the data transmission of the number of required bytes, and ends a transmission.

2-1-1-2. Data transmission sequence from Slave to Host

Host (Controller) Slave (The product)

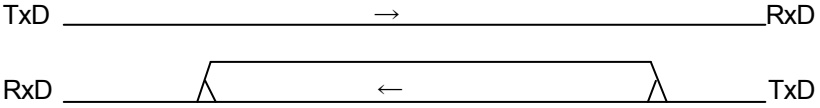

1. Slave starts a data transmission from TxD.
2. Slave performs the data transmission of the number of required bytes, and ends a transmission.

-

3. Definitions of Command, Status and Layer

This section is told how to define "Command" and "Status" of this product.

3-1. Commands

This chapter will show the commands of this product.

3-1-1. Normal Command list

Please refer the attached "Marantz_New_RS232C_Command_List-Receiver_All.xls".

3-2. Status request and Status answer list

3-2-1. Normal Status request and Status (answer and feedback) list

Please refer the attached "Marantz_New_RS232C_Command_List-Receiver_All.xls".

4. Revision history

Rev.	Date	Owner	Change description
1.00	09/27/2010	Marantz America, LLC.	First issue